PASQUALICCHIO

Ecological heat

Biomass Boilers

CS Marina / CSB Marina / Maxton / CGM

Made in Italy

Catalog v.2
2014

BIOMASS BOILERS
CS Marina » CSB Marina » Maxton » CGM
Catalog v.2

www.pasqualicchio.it | info@ctpasqualicchio.it

PASQUALICCHIO
Ecological heat

Pasqualicchio is ISO 9001
European Quality System Certified

Our Vision
'To take energy efficiency into every home"

Our Mission
'To identify solutions that respect the environment, creating products with reduced consumption, high efficiency and low emissions"

Paolisi, is situated in the heart of the South Italy, in the Province of Benevento.
A small municipality in the South of Italy that is home to **Pasqualicchio since the 70's**. Offering biomass heating solutions for over 40 years.
Currently, our offer includes 7 product lines: compact boilers, industrial boilers, multi-fuel boilers, air generators, air stoves, fireplace heating system and thermo-stoves. The company can count on a structure of over **18000 square metres**, made up from a specialised research and development centre, three production plants and one state-of-the-art design department.
Throughout the years, the business genius of the brothers **Francesco** and **Ruggiero Pasqualicchio** has established itself firmly on national and international markets, thanks to the dynamic company policy, typical of the market-pull.
It has been the requests of satisfied customers that have given the correct imprinting to focus on higher product quality. Playing the **thermo-technical know-how** card as an integral part of the company's DNA was indispensable. For **Pasqualicchio**, innovation, quality and know-how go hand-in-hand; all aimed at offering products increasingly closer to the customer's requirements. It is for this reason that the company is constantly searching for synergies and collaborations with the main suppliers of state-of-the-art components and machinery.

VISION

To take energy efficiency into every home

MISSION

To identify solutions that respect the environment,
creating products with reduced consumption,
high efficiency and low emissions

Pasqualicchio has always used state-of-the-art materials for its eco-compatible solutions. We have come a long way since the creation of first product over 40 years ago. Our objective is to identify solutions that respect the environment, creating products with reduced consumption, high efficiency and low emissions. Our products are innovative, without neglecting the environment, thanks to the use of fuels deriving from renewable sources, in a way to reduce pollution.

OUR HISTORY

A tale started in the 70's

The Pasqualicchio family's passion for the domestic "**fireplace**" is the milestone of an entrepreneurial experience that has its roots in the artisan production of domestic wood-burning stoves. All of this was kicked-off over 40 years ago by **Vito Antonio Pasqualicchio**. Innovative ideas took shape in his small laboratory, which reached industrial levels during the 90's, when **Francesco Pasqualicchio** and, successively his brother, **Ruggiero**, took over the company. \

1971 - 1980

Vito Antonio Pasqualicchio started to create the first wood-burning stoves from his artisan laboratory. His products were a great success immediately. This encouraged **Vito Antonio** to introduce innovations and expand his business.

1981 - 1989

Thanks to an ever increasing number of satisfied customers and the desire to be brought into question, production started to expand to new products such as fireplace heating systems and boilers.

1990 - 1999

A high demand required a radical transformation of the activity: during the 90's the family business became a Company. In 1996 the Pasqualicchio brand name was created; Francesco and Ruggiero Pasqualicchio, the sons of Vito Antonio, took over the helm of the company.

2000 - 2007

The decades of experience in the thermo-technical field and the engineering of business processes give a strong input to the Pasqualicchio brand. The company became a leader in the production of boilers, thermo- stoves, fireplace heating systems and air generators.

2008 - 2012

The second establishment measuring over 14000 m² was built in 2008, provided with a centre specialising in Research and development and a state-of-the-art design department.

RESEARCH AND DEVELOPMENT CENTRE

Research and development, one target: the absolute efficiency

Pasqualicchio Research and Development Centre

The Pasqualicchio R&D Centre has advanced technological laboratories and uses the professionalism of the expert researchers and talented young university students. Through these resources and structures, it develops the initiatives envisioned within the ambit of the G.E.Pro. (Green Energy Project) Company Research Programme, dealing with the analysis and development of technologies with the goal of producing clean energy at low cost.
The approach to the programme is mainly experimental. In a first step, the technologies, processes and systems within the laboratories are studied in-depth. The experimental area has test plants dedicated to the study and testing of flame aerodynamics, movement of solid biomasses, combustion and handling of fumes. In phase two there is a test at prototype level of the experimental machines, which then will reach industrial application once the various tests in the most important European Certification Institutes have been passed.

Increasing investments in Research & Development

Since 1996, Pasqualicchio has constantly increased the research and development of innovative technologies with an increase with respect to the previous year if about + 18%. The commitment in research and development has been broken down as follows, with approximately 60% going to innovation in the energy efficiency field, in order to reduce the environmental impact (reduction of the emissions and increase of the efficiency of the machines), 20% for the optimisation of combustion processes (with a focus on ecological double combustion) and 20% regarding thermal efficiency programs.

Supply

There is an experimental station for combustion tests for studies and research into potential solid biomasses suitable for combustion.
The centre has mobile grid boiler for experiments, suitable for the simulation of all operating conditions, including the continuous detection of the gaseous effects and emissions into the atmosphere. Monitoring the fumes allows to analyse the behaviour of the boiler and to set the excellent process parameters in order to reduce emissions and increase efficiency. Analysis of the ashes and dusts are an integral part of the tests.

The instruments used for the tests:

» Hydraulic circuit flow rate measuring device for the determination of the power transferred to the water
» Combustion analysers to measure CO, CO2, NO, NOx, dusts
» Isoperibolic calorimeter for measuring the upper heat value
» Truspec for Carbon, Hydrogen and Nitrogen Determinator
» TGA -701 to determine moisture, volatile substances and ashes
» Instruments for measuring fumes and air flow rate
» Multi-channel thermometers
» Scales

THE CERTIFICATIONS

Pasqualicchio quality system

The Certifications

Pasqualicchio follows the most stringent and strict procedures envisioned by the international Standards in order to obtain the highest company management quality and environmental standards as well as products with a high thermal efficiency and low emissions of carbon monoxide into the atmosphere.

How is certification obtained?

In order to obtain certification, each of our products must follow a precise procedure:
Phase 1) Every model is tested in the laboratory. Continuous analysis and strict controls are performed in the innovative Pasqualicchio Research and Development Centre. This uninterrupted study means that our products are in compliance with the highest safety standards.
Phase 2) Once the laboratory tests have been passed, the models are sent to the most important European Certification Institutes.
Here, the products are subjected to official tests according to that envisioned by the strict international Standards.
Phase 3) If the product passes the test, the Certification is issued. This document officially attests that the "product has been controlled and type-approved according to that envisioned by International Standards".
Phase 4) The product can officially boast the Certification. This is synonymous of guarantee, quality, safety and reliability.

Our certificates

ISO 9001
International Standard that defines the requirements of a quality management system for an organisation.

ISO 14001
International environmental management Standard that certifies that the company has a management system suitable to keep the environmental impact of its own company under control and they systematically seek improvement in a coherent, effective and above all sustainable manner.

Product Certifications

EN 303-5*
European Standard applied to heating boilers - including the connected safety devices - powered by solid fuels. The Standard defines requirements and test methods for safety, quality of combustion, operational features, marking and maintenance.

EN 14785
European Standard that specifies the requirements relative to design, manufacture, construction, safety and performance (efficiency and emissions), instructions and markings, as well as the relative test methods and fuels for the type test, for the pellet-burning heating appliances, also fed mechanically.

EN 13229
European Standard that specifies the requirements relative to design, manufacture, construction, safety and performance (emissions and yield), instructions and markings as well as the relative test methods for the type test, for inserts and fireplace heating systems also fed with solid fuel.

CE
The CE mark indicates that the product is in compliance with all European Community provisions that envision its use ": from design to manufacturing, introduction onto the market, commissioning of the product up to disposal. The CE mark governs the entire life cycle of the product from the time it is introduced onto the market.

15a B-VG
Certification for the respect of environmental safeguard measures

BAFA
Certification issued by the German Federal Office for economy and the control of export under the jurisdiction of the Federal Ministry of Economics and Technology (BMWi).

WHY PASQUALICCHIO?

10 reasons to choose Pasqualicchio, ecological heat

1. ENERGY SAVING

Thanks to the use of innovative materials, we can propose suitable solutions, able to reduce emissions. Our products combine performance, high quality and energy saving.

2. RESEARCH

Our products are designed to last through time. It is for this reason that we are at the forefront of research and in the study of techniques. Able to meet the customer's requirements with respect for the environment. Years of experience have allowed us to offer the best efficiency.

3. QUALITATIVE STANDARDS

Pasqualicchio has always considered quality as one of its priorities.
To make quality available, for us means searching for reliable, strong and long-lasting materials, so that the price of the product reflects its effective value.

4. CERTIFICATIONS

Pasqualicchio is ISO 9001 and ISO 14001 European Quality System Certified.
All of our products are in compliance with the European Standards with CE mark, tested and approved by the TUV laboratory according to EN 303-05, EN 13229, EN 14785 Standards.

EXCLUSIVE
design

5. EXCLUSIVE DESIGN

Most of our products are exclusive own design. The efficiency, together with the design and our passion, form the three basic pillars that have kept our business as a regerence in the national and international market for 40 years. The most prestigious interior designers are among our clients.

6. MADE IN ITALY

Pasqualicchio is an all Italian company, founded from family passion and a magical union between ourselves, which produce, and the people who choose us. Tradition, commitment and ambition have been the passwords of our professional and human experience. Our strong point is a Made in Italy aimed at the requirements of our customers with respect to the environment.

7. ASSISTANCE

Our philosophy is to give maximum reliability to the customer. We propose our after-sales service with a network of highly qualified technicians, trained directly within our company.
They intervene immediately and efficiently to solve any type of problem.

8. WIDE RANGE OF PRODUCTS

We currently have 7 product lines and over 100 models in the products portfolio. Choose from the wide range of Pasqualicchio products for your requirements, for your comfort, for yourself.

9. TECHNOLOGY

The Pasqualicchio products have the highest technology in the sector. It is the result of the in-depth research developed and perfected by the prestigious Pasqualicchio Research and Development Centre.

10. 5 YEAR WARRANTY

Our products are designed to last through time. As well as the legal warranty of 2 years, Pasqualicchio offers a warranty covering the boiler body for 5 years from the date of purchase.

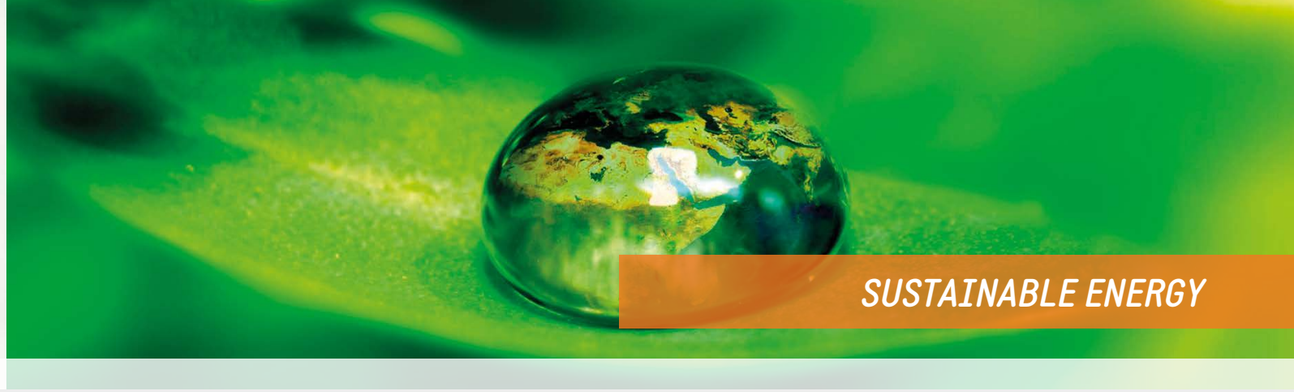

SUSTAINABLE ENERGY

To identify solutions that respect the environment

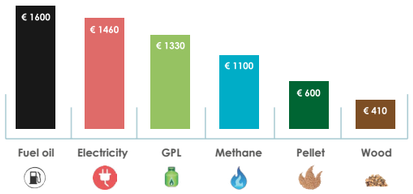

***Graphical notes**: annual yearly consumption for a house measuring 80 m² (average h 2.70 mt.) indicative value*

The use of alternative fuel costs much less with respect to traditional fossil fuels because with parity of heat produced, it is much less expensive with respect to petroleum or methane gas. Heating costs have a considerable weight at the end of the financial year. There are small changes suggested by the installers to lower the level, however remarkable results are not attained. If all of these solutions should integrate a Pasqualicchio product, which works exclusively with solid fuels, there would be a real saving. In fact, in terms of percentages, from 34% to 70% can be saved on home heating costs.

What is the biomass pellet of vegetable origin?

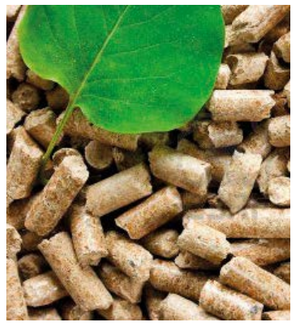

For various reasons, the pellet is surely one of the most used biomasses. They are obtained through simple mechanical processes, subjecting the finely worked sawdust to very high pressures. Pellet is manufactured starting from virgin sawdust remaining from the processing of the wood, suitably dried and pressed at high pressure in a way to obtain small cylinders of various sizes. Thanks to the binding capacity of lignin, a natural substance contained in wood, no type of additive is necessary and thus a natural, environmentally friendly and high efficiency fuel is obtained. Ideal for powering heating appliances, pellets are clean, non-pollutant and CO2 neutral. Burn completely with minimum ash residue, which can be used as a precious fertilizer for the garden. Given the pressing, in the production phase the energy density of the pellet is almost double that of wood. The pellets power the stoves for the heating of individual rooms and boilers for central heating. It is also used in district heating instead of wooden chips.

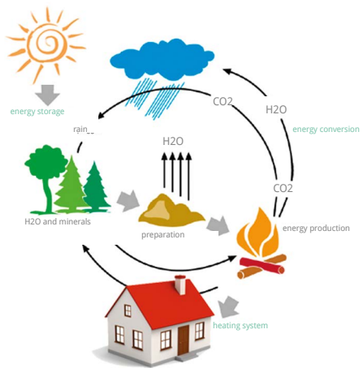

Why is the biomass ecological?

When talking about biomass it means any type of organic substance deriving directly or indirectly from the photosynthetic activity of plants. Its origin, both vegetable and animal, is in close correlation with the more general carbon cycle, which is one of the basic elements for metabolism and anabolism of all living organisms. This element enters the cycle in the form of carbon dioxide (CO2) and, thanks to the plants and their photosynthetic activity, is fixed in more complex compounds of an organic nature, which serve as base material for their growth and sustenance. Starting precisely from CO2, water and mineral salts, they use solar energy to process substances such as lignin, cellulose, hemicellulose, starches, sugars, etc.., which constitute the plant biomass. Through herbivores, a part of this material passes into the food chains of animals, to then be reprocessed in the form of fats, lipids, proteins, etc.., which instead constitute the animal biomass. The carbon cycle closes when all the carbon transformed into an organic compound via photosynthesis returns into the atmosphere as CO2, through a decomposition process. Biomass represents the most sophisticated form of accumulation of solar energy which, through photosynthesis is converted from light energy to chemical energy and stored in organic molecules. For this reason, it constitutes a renewable energy resource and respects the environment, as the carbon dioxide produced during combustion is reabsorbed by the plants during photosynthesis.

Biomass Boilers

ENERGY SAVING

HIGH QUALITY MATERIALS

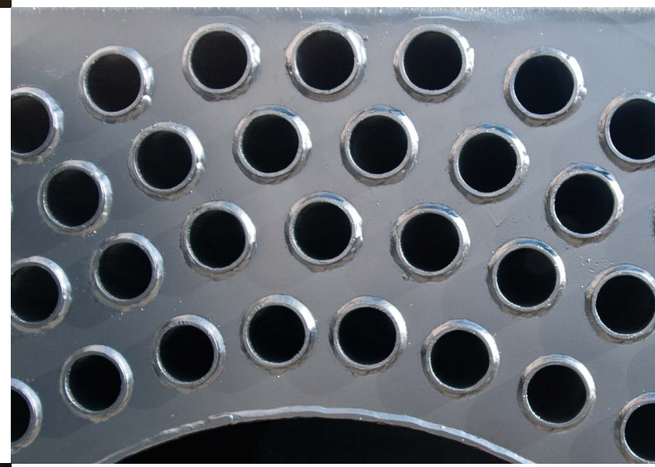

EFFICIENCY

SAFETY

For more info visit Us on **www.pasqualicchio.it**

CS Marina

Certified product

CE EN 303-5

Description

CS Marina is a boiler for central heating and the production of hot water. It uses solid biomass fuels coming from renewable energy sources such as pellets, olive pomace, almond shells, pistachio shells, hazelnut shells and pine nut shells. The CS Marina boiler has been designed to reach excellent biomass combustion levels. It can be fed with wood, pellets, olive pit, maize and olive pomace. Ideal for heating large rooms due to its high calorific value. It is suitable for civil and industrial environments (workshops, warehouses, sheds). Its remarkable versatility and the many possibilities of customisation, allows for installation in any environment. The CS Marina boiler produces low cost energy using natural fuels. It assures a saving of approx. 50% with respect to classical fuels.

Features

- **Fuel hopper**
- **Fuel conveying system: formed from two steel screw feeders**
- **Stable and long-lasting motors**
- **Adjuster valve**
- **Draft Safety Lock System**
- **Switch: to attenuate flame intensity when door is opened**
- **Steel panels: epoxy powder painted panelling**
- **Fuel level sensor**
- **Brush to clean the shell and tube**

Powers

Available with the following rated thermal inputs:

CS MARINA 34 » 29.00 kW
CS MARINA 40 » 46.40 kW
CS MARINA 60 » 69.60 kW
CS MARINA 80 » 92.80 kW
CS MARINA 99 » 114.84 kW
CS MARINA 130 » 150.80 kW
CS MARINA 180 » 208.80 kW
CS MARINA 230 » 266.80 kW
CS MARINA 300 » 348.00 kW
CS MARINA 400 » 464.00 kW
CS MARINA 500 » 580.00 kW
CS MARINA 650 » 754.00 kW
CS MARINA 800 » 928.00 kW
CS MARINA 950 » 1102.00 kW
CS MARINA 1350 » 1566.00 kW
CS MARINA 1600 » 1856.00 kW
CS MARINA 2000 » 2320.00 kW

Standard accessories

- Electronic control unit
- Door sensor
- SLS (Safety Lock System)
- Level fuel sensor

Optional accessories

- Domestic hot water*
- Automatic ignition
- ACS (AutoCleaning System)
- GSM Control
- Electric control board
- Fumes withholding turbulators
- Fire-prevention water valve

***Notes**: (*) accessory that can be installed up to CS Marina 99 model*

Fuels

Pellets *Wood* *Maize* *Olive pit* *Olive pomace*

CSB Marina

Certified product

CE EN 303-5

Description

The CSB Marina is a boiler useful for central heating and the production of hot water. It uses solid biomass fuels coming from renewable energy sources such as sawdust, wooden chips, pellets, olive pomace, almond shells, pistachio shells, hazelnut shells and pine nut shells. The CSB boiler is suitable for civil and industrial environments (workshops, warehouses, sheds). Its remarkable versatility and the many possibilities of customisation, allows for installation in any environment. CSB Marina can become part of the production processes. Fitted with a cast iron burner, the burner body is fully clad and, moreover, has a flame anti-return system called Safety Lock System

Features

- **Fuel hopper**
- **Fuel conveying system: formed from two steel screw feeders**
- **Stable and long-lasting motors**
- **Adjustment damper**
- **Safety Lock System**
- **Switch: to attenuate flame intensity when door is opened**
- **Steel panels: epoxy powder painted panelling**
- **Fuel level sensor**
- **Brush to clean the shell and tube**
- **Hopper switch**

Powers

Available with the following rated thermal inputs:

CSB MARINA 34 » 29.00 kW
CSB MARINA 40 » 46.40 kW
CSB MARINA 60 » 69.60 kW
CSB MARINA 80 » 92.80 kW
CSB MARINA 99 » 114.84 kW
CSB MARINA 130 » 150.80 kW
CSB MARINA 180 » 208.80 kW
CSB MARINA 230 » 266.80 kW
CSB MARINA 300 » 348.00 kW
CSB MARINA 400 » 464.00 kW
CSB MARINA 500 » 580.00 kW
CSB MARINA 650 » 754.00 kW
CSB MARINA 800 » 928.00 kW
CSB MARINA 950 » 1102.00 kW
CSB MARINA 950 » 1102.00 kW
CSB MARINA 1350 » 1566.00 kW
CSB MARINA 1600 » 1856.00 kW
CSB MARINA 2000 » 2320.00 kW

Standard accessories

- Mixer
- Electronic control unit
- SLS (Safety Lock System)
- Door sensor
- Fuel level sensor

Accessori optional

- Domestic hot water
- Automatic ignition
- ACS (AutoCleaning System)
- GSM Control
- Electric control board
- Fumes withholding turbulators
- Fire-prevention water valve

Fuels

Pellets *Wooden chips* *Wood* *Maize* *Olive pit* *Olive pomace* *Sawdust*

CS Marina » Operating layout

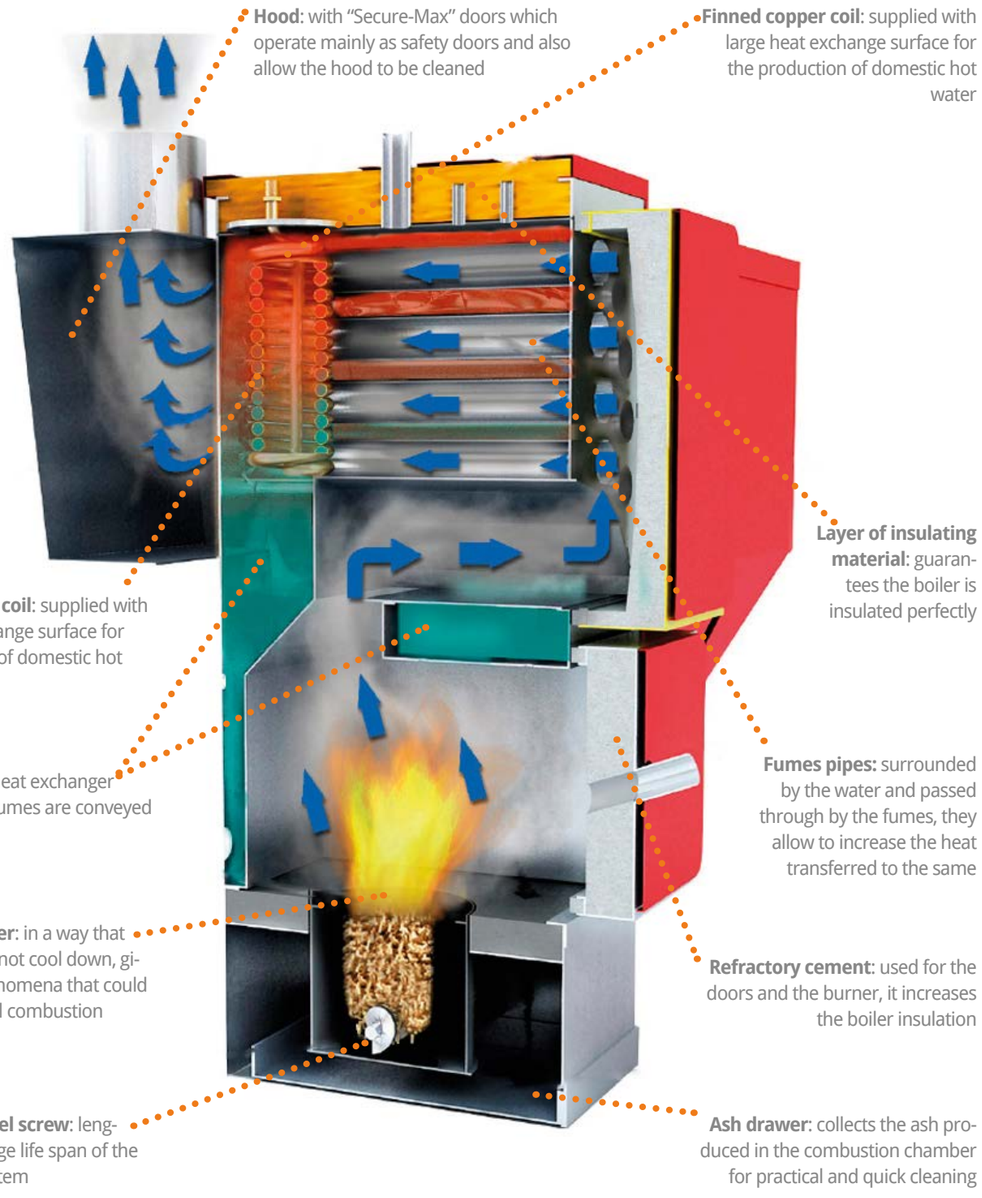

The fuel stored in the hopper is made to advance intermittently into the combustion chamber thanks to a system made up from two worm screws that turn with different speeds and which are separated by a safety valve (Safety Lock System). The flame develops inside the combustion chamber with the aid of combustion agent air blown by a fan. The flame together with the combustion fumes produce the heat supplied to the water present inside the boiler body. The energy is transferred to the heat-carrying fluid in two ways: by irradiation due to the flame and convection, i.e. thanks to the energy level of the fumes just developed by combustion.

CSB Marina » Operating layout

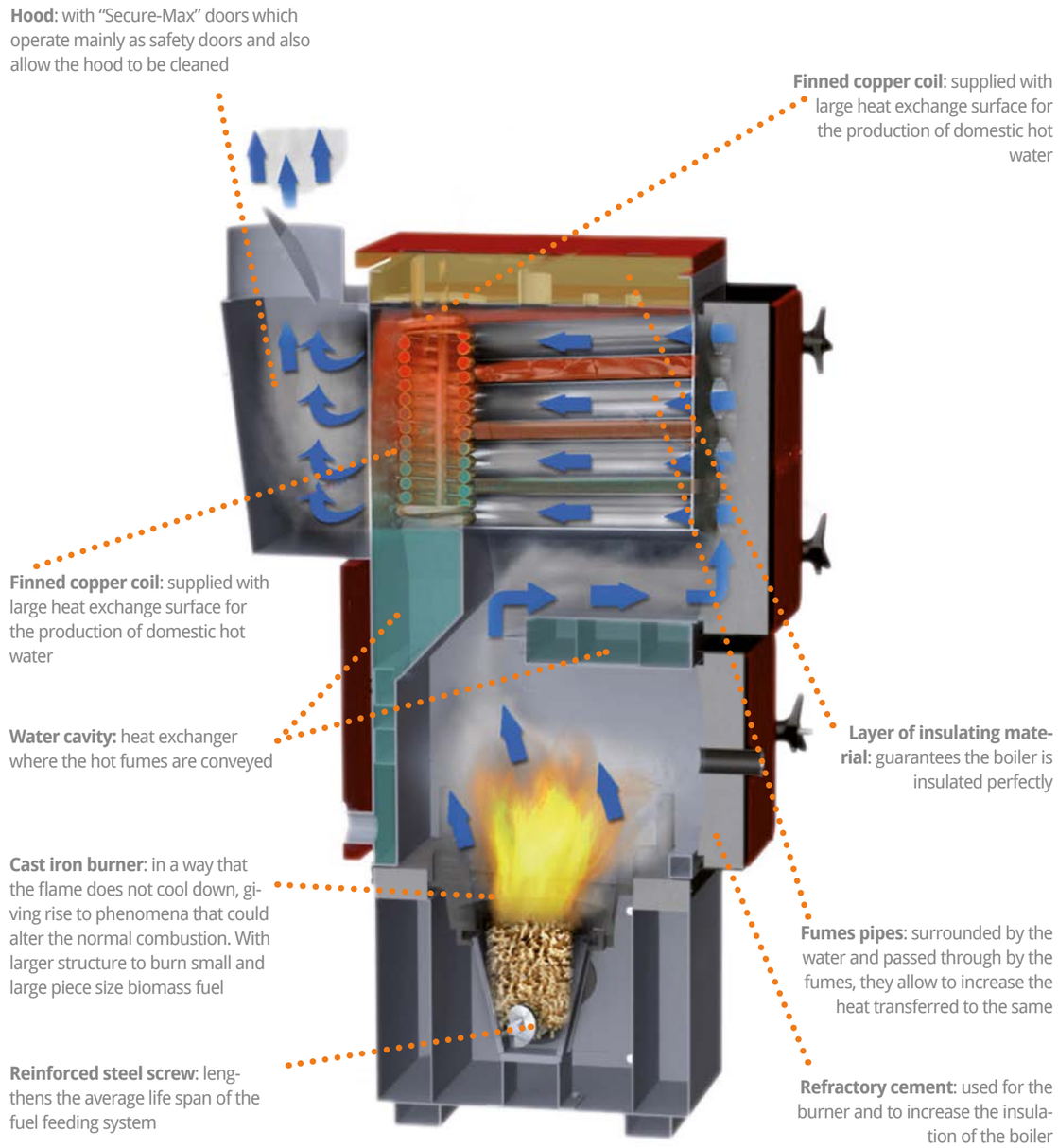

It is the fumes, which before being expelled from the flue, that are obliged to follow a certain pathway in the body of the boiler, known as the "smoke 3-pass", during which they transfer heat to the water it contains. This operation allows an excellent heat exchange with the heat carrier fluid, which translates into an increase in efficiency and a decrease in fuel consumption. The management of the entire machine is controlled by an electronic heat regulator, which makes operation completely automatic.

Automatic management

The new Pasqualicchio heat regulator is multi-functional. The boiler is fitted with a combustion system dedicated exclusively to wood. The passage from wood to biomass is automatic - with the addition of the blower as an optional - thanks to an electronic control unit with control system that allows to monitor the phases of combustion. The device reads the temperatures of the water and fumes using the probes, situated on the body of the boiler. The control unit can establish: ignition, maximum power, modulation and standby. Each of these phases has parameters that are different regarding screw operating times, combustion agent fan speed and the status of the safety lock system. The technical peculiarity of these systems is that they are also managed in non-routine situations, e.g. finishing of pellets in the silo or opening of the lower door. Moreover, seven configurations have been set to facilitate the simple and complex hydraulic plants. These allow to manage the boiler, puffer, pumps and heat exchangers through the temperatures read by the probes. Other functions are given by the installation of an internal timer, which allows to program the machine times. The GSM has also been included in the range of optionals in order to allow to control the machine via SMS. Finally, every floor-standing boiler has a connector for interfacing with a room thermostat.

Fire-prevention valve

It is an optional that allows to introduce water directly onto the fuel pipe. It starts to operate if high temperatures are recorded following any backfires.

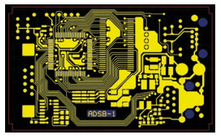

Modulation

Once the ideal temperature has been set in the environment, the boiler automatically modulates the flame via extraction ventilation and optimises the consumption of the fuel, thus reducing costs and waste. On reaching the temperature requested, there are just smouldering embers present in the boiler, ready to re-light at every temperature increase request coming from a room thermostat.

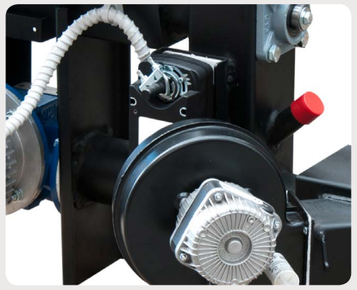

Safety lock system

Safety is not an optional for us. It is for this reason that we have fitted our boilers with an innovative system, connected directly to the circuit board. This closes the passage between the combustion chamber flame and the containment silo, ensuring perfect isolation of the material stored in the hopper. This type of system has the advantage of guaranteeing lower fuel consumption in the minimum phase due to closure of the air passage.

GSM Control

If the electronic control unit is connected to the GSM Control module (optional), it allows ignition via tablet or mobile phone. Moreover, start-up can be programmed if it is connected to a room thermostat.

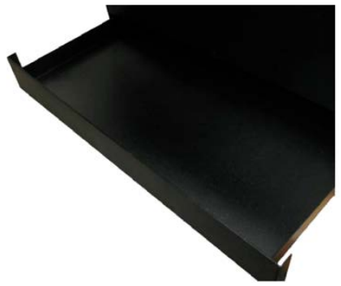

Cleaning

The fumes pathway has been designed horizontally to make heat exchanger cleaning quick and practical. The brush provided as per standard means that the ash - cleaned from the exchanger- ends up in the lower part of the fumes hood, positioned behind the boiler and which is accessed through the explosion-proof doors with hinged opening. Ash unload management can be automated on all models directly using the circuit board. Instead, from the model 60 it is possible to automate the removal of residues in the burner with an efficiency of 80%. Automatic cleaning of the fumes pathway is important to guarantee greater efficiency. This is the reason it has been proposed as an optional. Finally, the models used for civil application (from model CS25 to model CS99) are provided with a practical drawer (not envisioned for CSB models), positioned in the lower part of the boiler in a way to quicken and facilitate burner emptying.

Door switch

It is positioned on the direct access door of the combustion chamber. It allows to reduce flame intensity with the door open. For CSB models, a switch is also positioned on the opening of the hopper door.

CS Marina » Further details regarding components

Hopper

Positioned on the side or rear, they have a truncated inverted pyramid shape for the CS versions and truncated-cone shape for the CSB versions. These have different sizes and are mounted on all models. The hopper is adapted depending on the generator power band. For the floor-standing boilers, which have the smallest size mounted, a larger hopper can be requested.

Turbulators

It is an optional, also applicable successively, and is made up from helical steel bars. These modify the inner shape of the shell and tube in a way that the hot fumes lengthen their pathway inside the boiler body before reaching the flue, thus transferring a larger amount of heat to the water

Level sensor

Signals the reserve status of the fuel in the hopper. The boiler stops if it is not refilled. The sensor prevents complete emptying of the fuel conveying unit, saving the customer from annoying boiler re-start operations.

Domestic Hot Water Module

It is an optional that allows the production of domestic hot water for models up to 99. The coil is realised in finned copper to increase the heat exchange surface and has been designed to be installed also after purchase of the boiler.

Blower for automatic ignition

It is possible to automate switch-on, making use of the potentiality of the control unit, requesting the installation of the blower as an optional, which on blowing air at a very high temperature onto the biomass fuel, contained in the burner, triggers combustion.

Damper

It has been studied to solve any excessive draft problems, which would negatively affect burner operation. This type of solution guarantees normal operations of the machine also in the case of non-standard operating. In this way, it reduces the excessive consumption of fuel and improves efficiency of the entire boiler

Burner

It is the point where there is the effective generation of thermal energy obtained through the combustion of the material, previously stored in the silo and transported inside the burner through the double screw system. It constitutes the base of every boiler in the CS and CSB ranges and is formed from a thick external steel casing that encloses a cavity, inside which the combustion agent air and secondary air are appropriately conveyed. The upper base is made up from refractory material, which guarantees perfect isolation, while the "heart" of the entire structure where combustion takes place, is completely in cast iron.

Automatic management

The new Pasqualicchio heat regulator is multi-functional. The boiler is fitted with a combustion system dedicated exclusively to wood. The passage from wood to biomass is automatic - with the addition of the blower as an optional - thanks to an electronic control unit with control system that allows to monitor the phases of combustion. The device reads the temperatures of the water and fumes using the probes, situated on the body of the boiler. The control unit can establish: ignition, maximum power, modulation and standby. Each of these phases has different parametersregarding screw operating times, combustion agent fan speed and the status of the safety lock system. The technical peculiarity of these systems is that they are also managed in non-routine situations, e.g. finishing of pellets in the silo or opening of the lower door. Moreover, seven configurations have been set to facilitate the simple and complex hydraulic plants. These allow to manage the boiler, puffer, pumps and heat exchangers through the temperatures read by the probes. Other functions are given by the installation of an internal timer, which allows to program the machine times. The GSM has also been included in the range of optional in order to allow to control the machine via SMS. Finally, every floor-standing boiler has a connector for interfacing with a room thermostat.

Fire-prevention valve

It is an optional that allows to introduce water directly onto the fuel pipe. It starts to operate if high temperatures are recorded following any backfires.

GSM Control

If the electronic control unit is connected to the GSM Control module (optional), it allows ignition via tablet or mobile phone. Moreover, start-up can be programmed if it is connected to a room thermostat.

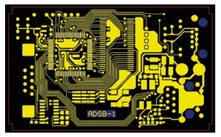

Modulation

Once the ideal temperature has been set in the environment, the boiler automatically modulates the flame via extraction ventilation and optimises the consumption of the fuel, thus reducing costs and waste. On reaching the temperature requested, there are just smouldering embers present in the boiler, ready to re-light at every temperature increase request coming from a room thermostat.

Door switch

It is positioned on the direct access door of the combustion chamber. It allows to reduce flame intensity with the door open. For CSB models, a switch is also positioned on the opening of the hopper door.

Cleaning

The fumes pathway has been designed horizontally to make heat exchanger cleaning quick and practical. The brush provided as per standard means that the ash - cleaned from the exchanger- ends up in the lower part of the fumes hood, positioned behind the boiler and which is accessed through the explosion-proof doors with hinged opening. Ash unload management can be automated on all models directly using the circuit board. Instead, from the model 60 it is possible to automate the removal of residues in the burner with an efficiency of 80%. Automatic cleaning of the fumes pathway is important to guarantee greater efficiency. This is the reason it has been proposed as an optional. Finally, the models used for civil application (from model CS25 to model CS99) are provided with a practical drawer (not envisioned for CSB models), positioned in the lower part of the boiler in a way to quicken and facilitate burner emptying.

Safety lock system

Safety is not an optional for us. It is for this reason that we have fitted our boilers with an innovative system, connected directly to the circuit board. This closes the passage between the combustion chamber flame and the containment silo, ensuring perfect isolation of the material stored in the hopper. This type of system has the advantage of guaranteeing lower fuel consumption in the minimum phase due to closure of the air passage.

CSB Marina » Further details regarding components

Hopper

Positioned on the side or rear, they have a truncated inverted pyramid shape for the CS versions and truncated-cone shape for the CSB versions. These have different sizes and are mounted on all models. The hopper is adapted depending on the generator power band. For the floor-standing boilers, which have the smallest size mounted, a larger hopper can be requested.

Turbulators

It is an optional, also applicable successively, and is made up from helical steel bars. These modify the inner shape of the shell and tube in a way that the hot fumes lengthen their pathway inside the boiler body before reaching the flue, thus transferring a larger amount of heat to the water

Level sensor

Signals the reserve status of the fuel in the hopper. The boiler stops if it is not refilled. The sensor prevents complete emptying of the fuel conveying unit, saving the customer from annoying boiler re-start operations.

Domestic Hot Water Module

It is an optional that allows the production of domestic hot water for models up to 99. The coil is realised in finned copper to increase the heat exchange surface and has been designed to be installed also after purchase of the boiler.

Mixer

Supplied as per standard on all products in the CSB range, it is necessary for omnivorous boilers operating with large piece size biomass fuel and fine fuels such as sawdust. The system is composed of a mechanical arm positioned inside the hopper and is managed through a motor connected to a reducer, directly by the electronic control board, which governs its operating times. It moves the material stored inside the silo in a way to prevent "bridges", which can prevent arrival inside the combustion chamber

Damper

It has been studied to solve any excessive draft problems, which would negatively affect burner operation. This type of solution guarantees normal operations of the machine also in the case of non-standard operating. In this way, it reduces the excessive consumption of fuel and improves efficiency of the entire boiler.

Burner

It is the point where there is the effective generation of thermal energy obtained through the combustion of the material, previously stored in the silo and transported inside the burner through the double screw system. It constitutes the base of every boiler in the CS and CSB ranges and is formed from a thick external steel casing that encloses a cavity inside which the combustion agent air and secondary air are appropriately conveyed. The upper base is made up from refractory material, which guarantees perfect isolation, while the "heart" of the entire structure where combustion takes place, is completely in cast iron.

Blower for automatic ignition

It is possible to automate switch-on, making use of the potentiality of the control unit, requesting the installation of the blower as an optional, which on blowing air at a very high temperature onto the biomass fuel, contained in the burner, triggers combustion.

Certified product

CE PED 97/23/CE

Sed-Fuel Technology

Maxton

Description

The industrial boilers in the Maxton range are suitable for hot water, superheated water and steam. The boilers are powered by solid recovery fuels coming from various industries (wood, agri-foodstuffs, extractive, etc.). Thanks to our thermo-technical know-how we have manufactured boilers that can obtain perfect combustion, which are reliable and which are managed automatically. There is a wide range of fuels; any production waste that does not contain high levels of noxious products and which have a calorific value over 291 kWh/kg can be used in the Maxton range of boilers in an economically valid way. Generally, the waste fuels used are catalogued on the basis of their origin, which can be the wood industry or the agri-foodstuffs industry. The Maxton range boilers for hot water, superheated water and steam, can use these products. Obviously, devices must be envisioned on the basis of the features of the various fuels, i.e. moisture, particle size, etc.

Features

- **Large heat exchange surface:** increases boiler efficiency
- **High efficiency:** up to 93% thanks to the low temperature of the fumes
- **Automatic intelligent cleaning system:** greatly reduced machine downtime due to routine maintenance of the plant
- **Automatic ignition:** guarantees better plant start & stop programming, optimising the biomass inlet and the emissions
- **Innovative combustion system**
- **Pressure control:** allows to work with double pressures with respect to those in its category - up to 4 bar. This allows the boiler to work with higher temperature differences - in input and output. Thanks to these differences, low voltage pumps can be installed, which greatly reduce energy consumption.

Powers

Available in the following rated heat power range:

Da 2000 kW » up to » 5800 kW for hot water

Da 500 kg/h » up to» 10 ton/h for superheated

Da 600 kW » up to » 5800 kW for steam

Fuels

Fuels deriving from the machining of wood:

- Biomasses
- Wooden chips
- Bark pieces
- Wood composts treated with glues and paints
- Shredded branches
- Sawdust
- Any type of waste wood
- Shavings

Fuels deriving from the agri-foodstuffs industry:

- Walnut shells
- Hazelnut shells
- Rice husk
- Peach stones
- Olive pomace
- Corn cobs
- Marcs
- Grape seeds

View with doors open

Burner

Certified product

CE

Pasqualicchio 16 Sed-Fuel Technology

CGM

Description

The industrial boilers CGM are useful for the production of hot water, superheated water and steam. The boilers are have the particularity to burn fuel with a high content moisture. The burner with mobile-grid is realised in cast iron (NiCr) and allows to burn woody fuels with moisture content from 30 to 60%:unlike the fixed grid, it has a moving part, activated automatically by the electronic management system of the entire boiler, which allows better combustion of the material thanks to excellent exposure of the fuel to the combustion agent air. This solution allows to obtain an improvement of temperature and lower emissions compared to boilers with fixed-grids. They are fed by solid biomass recovery from various industrial or agricultural processes. The range of fuels is great and include any remains from production process - even with a high content moisture - which contains no harmful products in large quantities and have a calorific value greater than 5 kWh/kg can be used. Typically, waste fuels used are cataloged according to their origin, that may come from the wood industry or the food industry.Generally, the waste fuels used are catalogued on the basis of their origin, which can be the wood industry or the agri-foodstuffs industry.

Features

- **Burner with mobile-grid**
- **Large heat exchange surface:** increases boiler efficiency
- **High efficiency:** up to 93% thanks to the low temperature of the fumes
- **Automatic intelligent cleaning system:** greatly reduced machine downtime due to routine maintenance of the plant
- **Automatic ignition:** guarantees better plant start & stop programming, optimising the biomass inlet and the emissions
- **Innovative combustion system**
- **Pressure control:** allows to work with double pressures with respect to those in its category - up to 4 bar. This allows the boiler to work with higher temperature differences - in input and output. Thanks to these differences, low voltage pumps can be installed, which greatly reduce energy consumption
- **Pasqualicchio Sed-Fuel Technology**

Powers

Available in the following rated heat power range:

34 kW » up to» 5800 kW for hot water

500 kg/h » up to » 10 ton/h for superheated

600 kW » up to » 5800 kW for steam

Fuels

- **Any typ of waste woos**
- **Pellets**
- **Sawdust**
- **Wooden chips**
- **Fuel with high content moisture**

View of burner with mobile-grid and combustion chamber

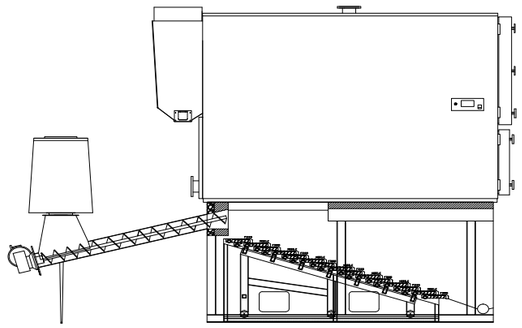

Layout CGM

CS Marina » Technical specifications

	Standard Hopper 60x60					Standard Hopper 80x80			Standard Hopper 100x100								
Model	**CS34**	**CS40**	**CS60**	**CS80**	**CS99**	**CS130**	**CS180**	**CS230**	**CS300**	**CS400**	**CS500**	**CS650**	**CS800**	**CS950**	**CS1350**	**CS1600**	**CS2000**
Potenza																	
Chimney [kW]	33,64	53,36	78,88	105,56	136,88	171,68	237,80	303,92	395,56	527,80	660,04	857,24	1054,44	1252,80	1934,35	2268,86	2836,04
Nominal Power [kW]	29,00	46,40	92,80	114,84	114,84	150,80	208,80	266,80	348,00	464,00	580,00	754,00	928,00	1102,00	1569,77	1860,46	2325,58
Chimney [kcal/h]	29000	46000	46000	91000	118000	148000	205000	262000	341000	455000	569000	739000	909000	1080000	1646340	1951220	2439000
Nominal Power [kcal/h]	25000	40000	60000	80000	99000	130000	180000	230000	300000	400000	500000	650000	800000	950000	1350000	1600000	2000000
Dimensions																	
A [mm]	930	930	1130	1130	1530	1430	1680	1980	1980	2330	2680	2780	3080	3380	4250	4750	5250
B [mm]	540	540	740	940	1140	940	1190	1490	1440	1790	2140	2140	2440	2740	3550	4050	4550
C [mm]	1420	1420	1420	1420	2410	2300	3040	3350	3950	4290	4640	4980	5280	5580	6290	6790	7290
D [mm]	630	630	630	630	630	980	980	980	1100	1100	1100	1310	1310	1310	1800	1800	1800
E [mm]	1060	1060	1060	1060	1060	1420	1420	1420	1620	1770	1770	1770	2070	2070	2450	2450	2450
F [mm]	270	270	270	270	270	360	420	420	420	420	420	420	420	420	500	500	500
G [mm]	660	660	660	660	990	980	1750	1750	1890	1890	1890	2230	2230	2230	2230	2230	2230
H [mm]	1350	1350	1350	1350	1350	1540	1650	1650	1800	1800	1800	1800	1800	1800	1800	1800	1800
I [mm]	530	530	530	530	530	840	840	840	960	960	960	1180	1180	1180	1670	1670	1670
L [mm]	370	370	370	370	370	520	520	520	620	620	620	620	720	720	955	955	955
M [mm]	565	565	765	965	1170	970	1220	1520	1470	1820	2170	2170	2470	2770	3450	3950	4450
N* [mm]	950	950	950	950	1600	1500	2380	2570	2660	3010	3140	3420	3620	3820	4500	5000	5000
O [mm]	550	550	550	550	550	730	730	730	830	980	980	980	1180	1180	1350	1350	1350
Q1 [mm]	315	315	315	315	315	490	490	490	550	550	550	655	655	655	900	900	900
Q2 [mm]	310	310	382	482	585	485	610	760	735	910	1070	1085	1235	1385	1775	2025	2025
Q3 [mm]	//	//	//	//	//	//	//	//	70	70	70	70	70	70	70	70	70
R1 [mm]	370	370	370	370	370	465	525	525	585	585	585	585	585	585	620	620	620
R2 [mm]	315	315	315	315	315	490	490	490	265	265	265	265	265	265	250	250	250
R3 [mm]	//	//	//	//	//	//	//	//	570	570	570	780	780	780	1300	1300	1300
S1 [mm]	315	315	315	315	315	//	//	//	//	//	//	//	//	//	//	//	//
S2 [mm]	95	95	95	95	95	//	//	//	//	//	//	//	//	//	//	//	//
S3 [mm]	55	55	55	55	55	//	//	//	//	//	//	//	//	//	//	//	//
T1 [mm]	//	//	//	//	//	490	490	490	550	550	550	655	655	655	900	900	900
T2 [mm]	//	//	//	//	//	270	270	270	270	270	270	270	270	270	875	875	875
T3 [mm]	//	//	//	//	//	455	705	1005	955	1305	1660	1665	1955	2255	1900	2400	2900
Dimension combustion chamber (Lu x La x Al) **[mm]**	500 475 350	500 475 350	700 475 350	900 475 350	1105 475 350	900 770 505	1150 770 505	1450 770 505	1400 900 605	1750 900 605	2100 900 605	2100 1100 605	2400 1045 705	2700 1045 705	3380 1430 930	3380 1430 930	3380 1430 930
Chimney [mm]	200					300			350			450			550		
Weight [kg]	460	460	535	580	670	1120	1580	1720	2510	2820	3300	5510	6120	6710	9920	10650	12200
Fuel																	
Type	Pellets, Wood, Maize, Olive pit, Olive pomace																
Tank capacity]	200 / 130					600 / 400			950 / 620						950 / 620		
Hydraulics																	
Water connection system [Inches]	DN 40					DN 65			DN 80			DN 100			DN 125		
Water connection [Inches]	DN 15					Not applicable											
Nominal pressure [bar]	3																
Water capacity [Lit]	115	115	152	195	235	500	650	525	980	1120	1315	1840	2220	2630	4450	4820	5600
Info																	
Optionals	Domestic hot water (only for model up to 99), Ash drawer, Refrectory cement, Turbolators, Automatic ignition, External tank																
Power supply	500 W to 230 V 50 Hz				1000 W to 230 V 50 Hz,or 380 v 50hZ				1500 W to 380 V 50 Hz						5000 W 380 V 50 Hz		
Pellets consumptions Min / Max [kg/h]*	6,8	10,8	16,0	21,0	26,8	34,3	47,6	60,8	79,1	105,6	132,0	171,4	210,9	250,6	386,9	453,8	567,2

Pasqualicchio reserves the right to make technical, dimensional and aesthetic modifications to its products for improvement, without forewarning. This does not constitute right of withdrawal for the customer.
Notes: (*) the values have been calculated taking a fuel with calorific value below 5 [kW * h/kg] as a reference.

From CS34 to CS99 with hopper 80*80					
With hopper 80*80 only change about dimensions are “C” and “H”					
Model	**CS34**	**CS40**	**CS60**	**CS80**	**CS99**
C [mm]	1830	1830	1520	1520	5
H [mm]	1550	1550	1550	1550	1550

From CS34 to CS99 with hopper 100*100					
With hopper 100*100 only change about dimensions are “C” and “H”					
Model	**CS34**	**CS40**	**CS60**	**CS80**	**CS99**
C [mm]	2030	2030	2030	2030	3020
H [mm]	1690	1690	1690	1690	1690

From CS130 to CS230 with hopper 100*100			
With hopper 100*100 only change about dimensions are “C” and “H”			
Model	**CS130**	**CS180**	**CS230**
C [mm]	2820	3530	3840
H [mm]	1690	1800	1800

EXTERNAL CHARGE SYSTEM FOR CS - CSB - CGM

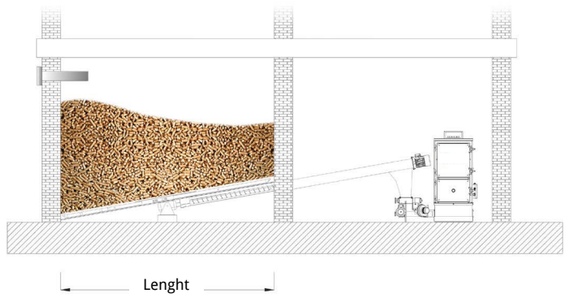

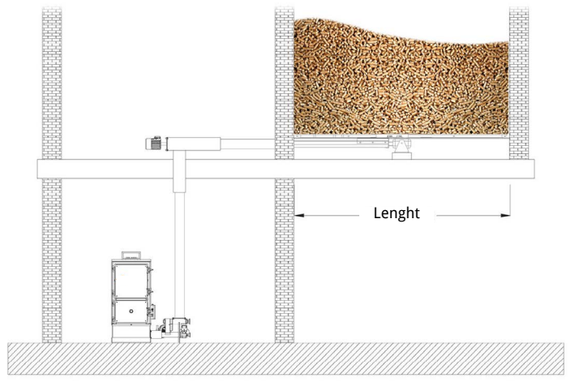

DIMENSIONS CS34-80 WITH HOPPER 60X60

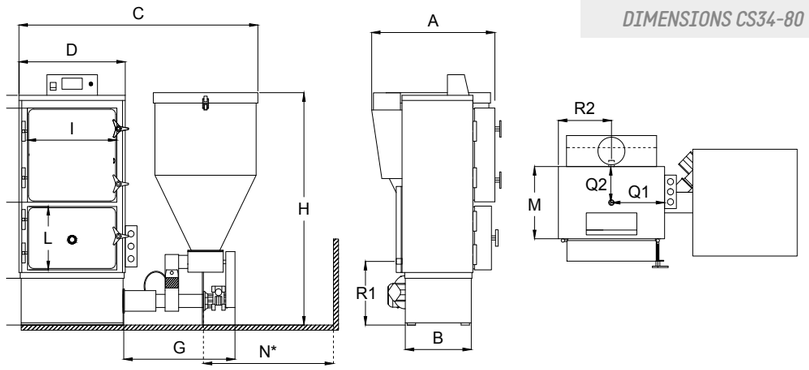

DIMENSIONS CS34-40 WITH HOPPER 80X80

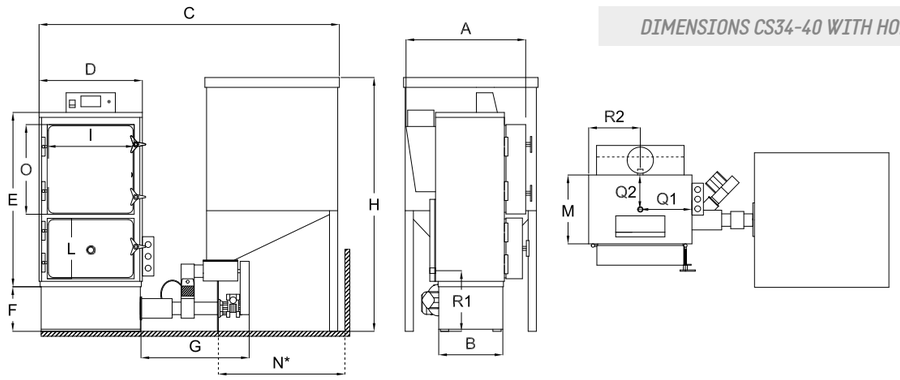

DIMENSIONS CS34-80 WITH HOPPER 100X100

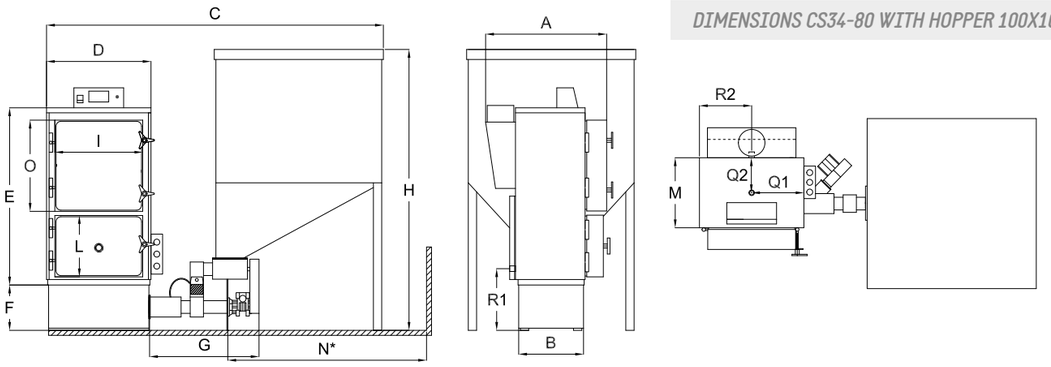

DIMENSIONS CS60-80 WITH HOPPER 80X80

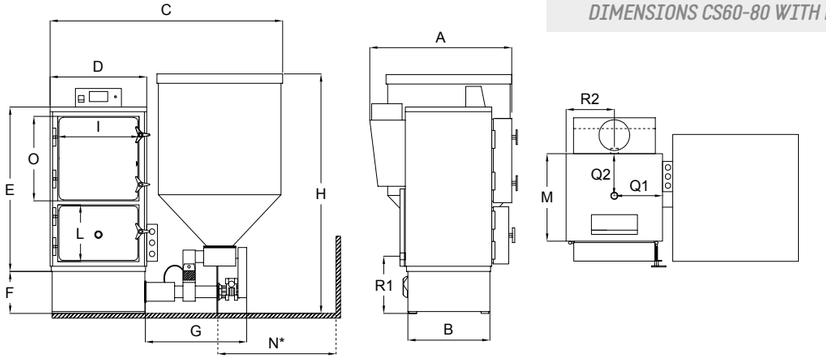

DIMENSIONS CS99 -130 WITH HOPPER 60X60

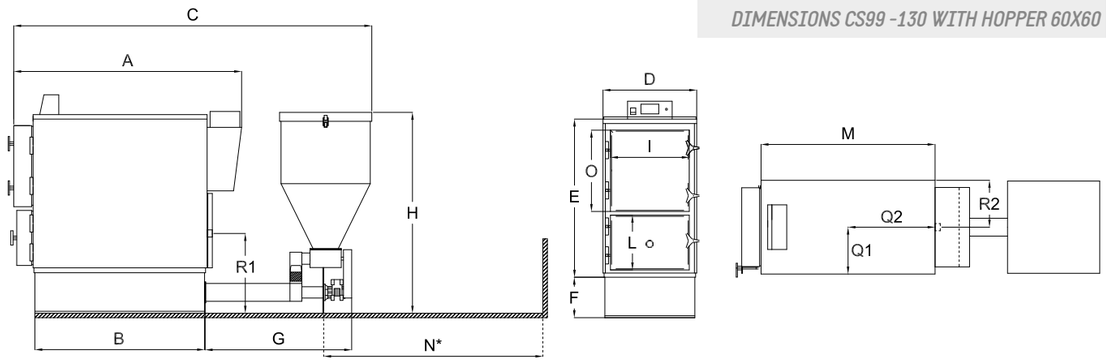

DIMENSIONS CS99 -130 WITH HOPPER 80X80

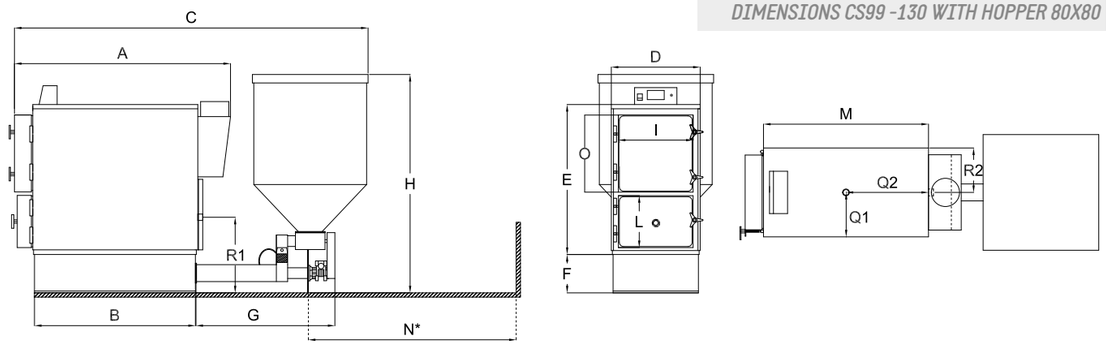

DIMENSIONS CS99 -130 WITH HOPPER 100X100

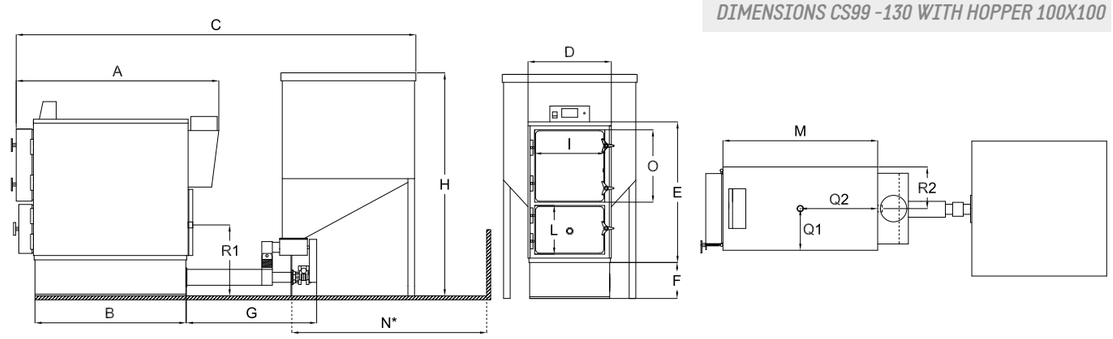

DIMENSIONS CS180-230 WITH HOPPER 80X80

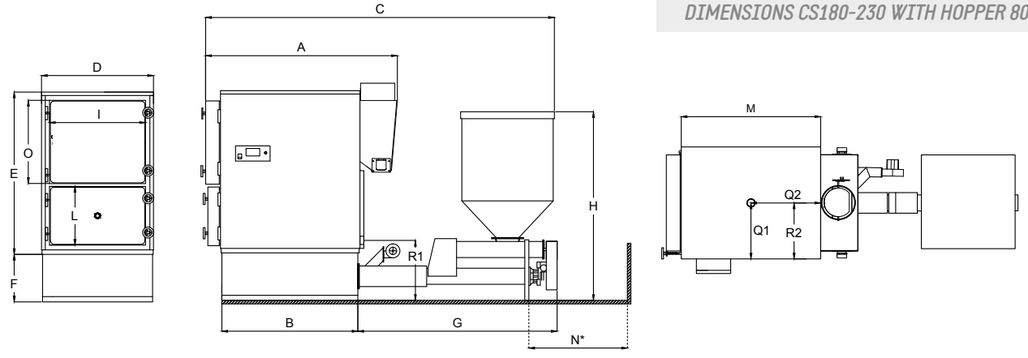

CS Marina » Technical specifications

MISURE CS180-230 CON TRAMOGGIA 100X100

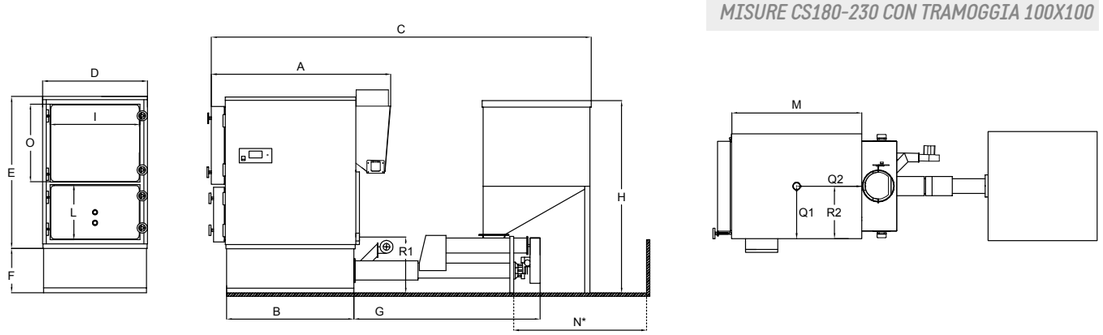

DIMENSIONS CS300-650 WITH HOPPER 100X100

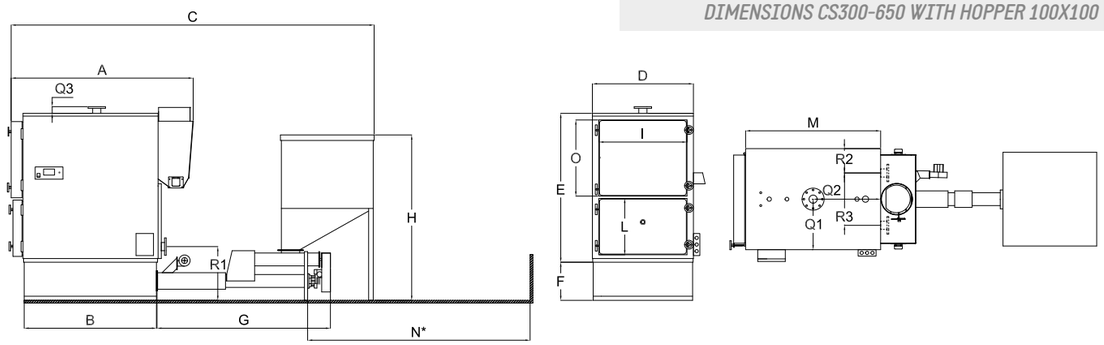

DIMENSIONS CS800-2000 WITH HOPPER 100X100

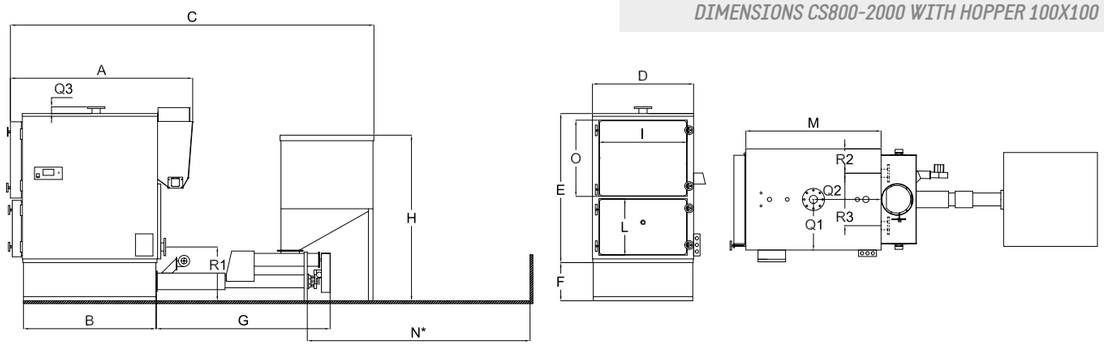

DIMENSIONS CS25-99

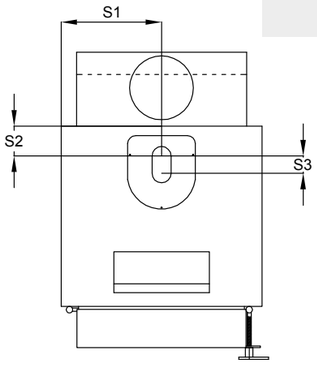

DIMENSIONS THERMAL OUTLET CS130-950

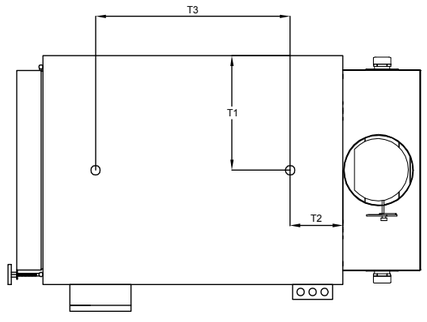

CSB Marina » Technical specifications

	H100						H130										
Model	**CSB34**	**CSB40**	**CSB60**	**CSB80**	**CSB99**	**CSB130**	**CSB180**	**CSB230**	**CSB300**	**CSB400**	**CSB500**	**CSB650**	**CSB800**	**CSB950**	**CS1350**	**CS1600**	**CS2000**
Power																	
Chimney [kW]	34,28	56,36	78,88	105,56	136,88	171,68	237,80	303,92	395,56	527,80	660,04	857,24	1054,44	1252,80	1934,35	2268,86	2836,04
Nominal Power [kW]	29,80	46,40	69,60	92,80	114,84	150,80	208,80	266,80	348,00	464,00	580,00	754,00	928,00	1102,00	1569,77	1860,46	2325,58
Chimney [kcal/h]	29900	46000	68000	91000	118000	148000	205000	262000	341000	455000	569000	739000	909000	1E+06	1646340	1951220	2439000
Nominal Power [kcal/h]	25980	40000	60000	80000	99000	130000	180000	230000	300000	400000	500000	650000	800000	950000	1350000	1600000	2000000
Dimensions																	
A [mm]	930	930	1130	1130	1530	1430	1680	1980	1980	2330	2680	2780	3080	3080	4250	4750	5250
B [mm]	540	540	740	940	1140	940	1190	1490	1440	1790	2140	2140	2740	2740	3550	4050	4550
C [mm]	2100	2100	2100	2100	2880	2820	3070	3370	3470	3820	4170	4500	4800	5100	6290	6790	7290
D [mm]	630	630	630	630	630	980	980	980	1100	1100	1100	1310	1310	1310	1800	1800	1800
E [mm]	1060	1060	1060	1060	1060	1420	1420	1420	1620	1770	1770	1770	2070	2070	2450	2450	2450
F [mm]	420	420	420	420	420	420	420	420	420	420	420	420	420	420	500	500	500
G [mm]	1480	1480	1480	1480	1600	1740	1740	1740	1890	1890	1890	2220	2220	2220	2230	2230	2230
H [mm]	1590	1590	1590	1590	1590	1590	1870	1870	1870	1870	1870	1870	1870	1870	1870	1870	1870
I [mm]	530	530	530	530	530	840	840	840	960	960	960	1170	560	560	1670	1670	1670
L [mm]	370	370	370	370	370	520	520	520	620	620	620	620	720	720	955	955	955
M [mm]	565	565	765	965	1170	970	1220	1520	1470	1820	2170	2170	2470	2770	3450	3950	4450
N* [mm]	1730	1730	1730	1730	2200	2270	2480	2700	2800	3110	3330	3130	3330	3630	4300	4800	5300
O [mm]	550	550	550	550	550	730	730	730	830	980	980	980	1180	1180	1350	1350	1350
P [mm]	1190	1190	1230	1330	920	1310	1310	1310	1370	1370	1370	1470	1470	1470	//	//	//
Q1 [mm]	315	315	315	315	315	490	490	490	550	550	550	655	655	655	900	900	900
Q2 [mm]	310	310	382	482	585	485	610	760	735	910	1070	1085	1235	1385	1775	2025	2225
Q3 [mm]	//	//	//	//	//	//	//	//	70	70	70	70	70	70	70	70	70
R1 [mm]	525	525	525	525	525	525	525	525	585	585	585	585	585	585	620	620	620
R2 [mm]	315	315	315	315	315	490	490	490	265	265	265	265	265	265	250	250	250
R3 [mm]	//	//	//	//	//	//	//	//	570	570	570	780	780	780	1300	1300	1300
S1 [mm]	315	315	315	315	315	//	//	//	//	//	//	//	//	//	//	//	//
S2 [mm]	95	95	95	95	95	//	//	//	//	//	//	//	//	//	//	//	//
S3 [mm]	55	55	55	55	55	//	//	//	//	//	//	//	//	//	//	//	//
T1 [mm]	//	//	//	//	//	490	490	490	550	550	550	655	655	655	900	900	900
T2 [mm]	//	//	//	//	//	270	270	270	270	270	270	270	270	270	875	875	875
T3 [mm]	//	//	//	//	//	455	705	1005	955	1305	1660	1665	1955	2255	1900	2400	2900
Dimension combustion chamber (Lu x La x Al) **[mm]**	500 475 350	500 475 350	700 475 350	900 475 350	1105 475 350	900 770 505	1150 770 505	1450 770 505	1400 900 605	1750 900 605	2100 900 605	2100 1100 605	2400 1045 705	2700 1045 705	3880 1430 930	3880 1430 930	3880 1430 930
Chimney [mm]			200				300			350			450			550	
Weight [kg]	460	460	535	580	670	1470	1580	1830	2600	2980	3300	5580	6120	6710	9920	10650	12200
Fuel																	
Type	Pellets, Woode chips, Wood, Maize, Olive pit, Olive pomace, Sawdust																
Tank capacity [Lit/kg-Pellet]	570 / 370						740 / 480										
Hydraulics																	
Water connection system [Inches]	DN 40					DN 65			DN 80			DN 100			DN 125		
Water connection system [Inches]	DN 15					Not applicable											
Nominal pressure [bar]	3																
Water capacity [Lit]	115	115	152	195	235	500	650	525	980	1120	1315	1840	2220	2630	4450	4820	5600
Info																	
Optionals	Domestic hot water (only for model up to 99), Ash drawer, Refrectory cement, Turbolators, Automatic ignition, External tank																
Power supply	1440 W to 230 V 50 Hz, or 380 V 50 Hz				1700 W to 230 V 50 Hz, or 380 V 50 Hz				3500 W 380 V 50 Hz						5000 W 380 V 50 Hz		
Pellets consumptions Min / Max [kg/h]*	6,8	10,8	16,0	21,0	26,8	34,3	47,6	60,8	79,1	105,6	132,0	171,4	210,9	250,6	386,9	453,8	567,2

Pasqualicchio reserves the right to make technical, dimensional and aesthetic modifications to its products forimprovement, without forewarning. This does not constitute right of withdrawal for the customer.
Notes: (*) the values have been calculated taking a fuel with calorific value below 5 [kW * h/kg] as a reference.

DIMENSIONS CSB24-80

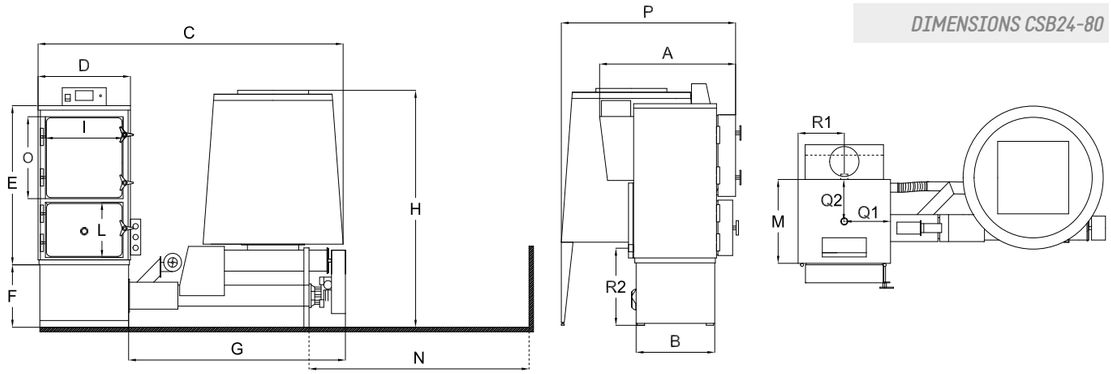

DIMENSIONS CSB99

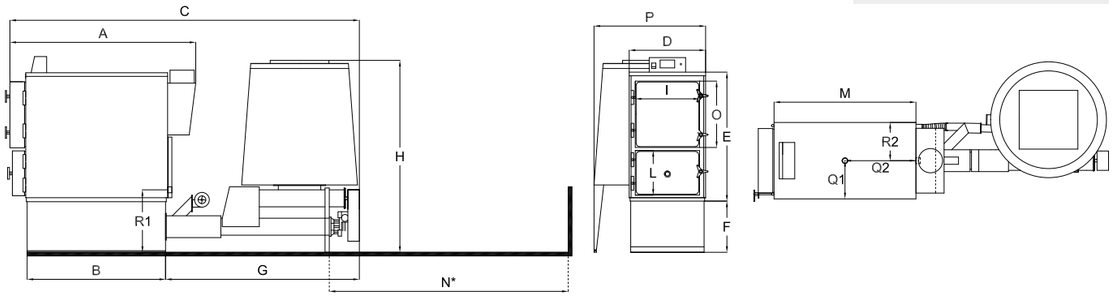

DIMENSIONS CSB130-230

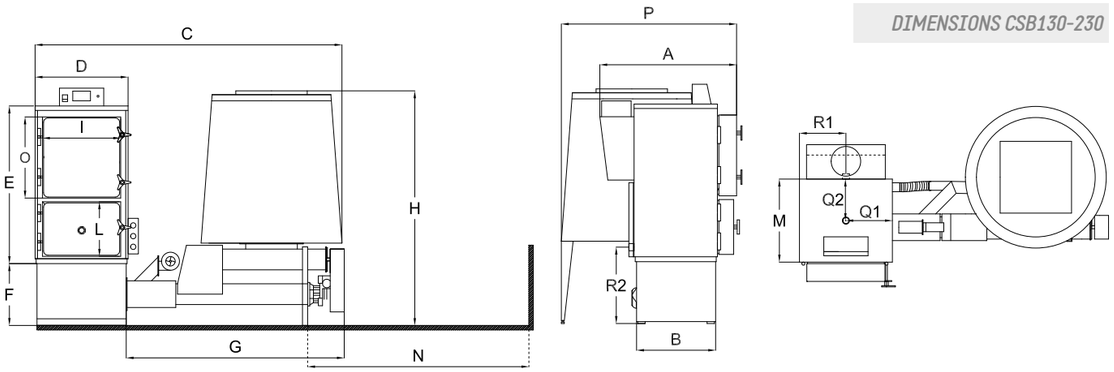

DIMENSIONS CSB300-650

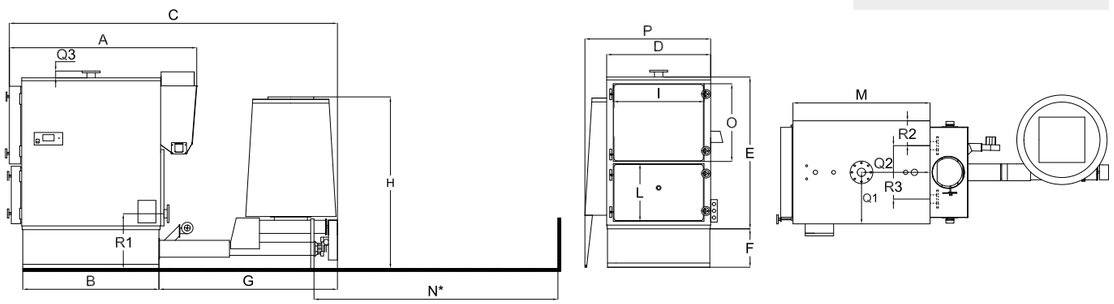

DIMENSIONS CSB800-950

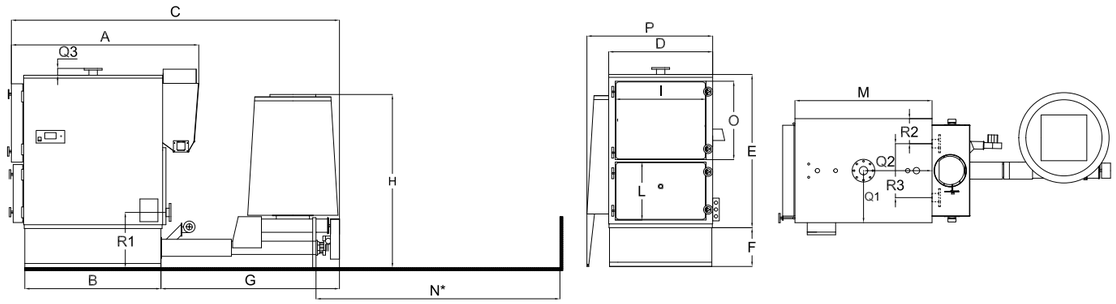

DIMENSIONS CSB 40-99

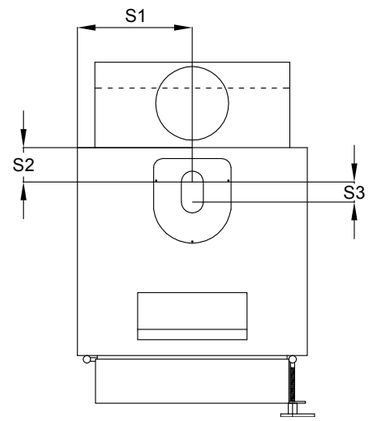

DIMENSIONS OUTLET CSB 130-950

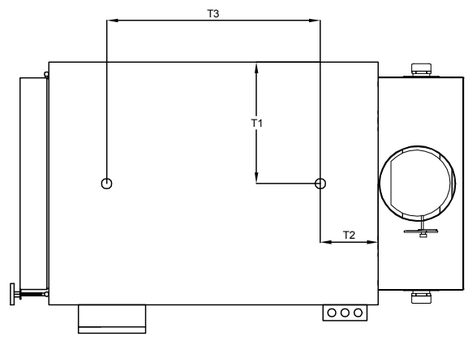

WHERE WE ARE

PASQUALICCHIO
Ecological heat

Pasqualicchio s.r.l
Via Vannara - Z.I.
82011 **Paolisi** (BN) Italy

tel. +39 0823 951582
tel. +39 0823 950415
fax. +39 0823 951700

www.pasqualicchio.it
info@ctpasqualicchio.it

facebook.com/ct.pasqualicchio
linkedin.com/company/pasqualicchio
twitter.com/CtPasqualicchio
youtube.com/ctpsrl

Made in Italy

PASQUALICCHIO
Ecological heat

PASQUALICCHIO

Ecological heat

Pasqualicchio s.r.l
Via Vannara - Z.I. | 82011 **Paolisi** (BN) Italy
Phone (+39) 0823951582 | (+39) 0823 950415

www.pasqualicchio.it | info@ctpasqualicchio.it